RTTY

SM5KV

Radio amateur SM5KV, Olle Ekblom, at his station. Swedish radio amateurs — at present numbering approximately 3,000 — were authorized during the year to use radio teleprinting for mutual communication, in accordance with recommendations adopted in 1963 by a meeting at Malmo of the IARU (International Amateur Radio Union).

RYRYRYRYRYRYRYRYRYRYRYRYRYRYRYRYRYRYRYRYRYRYRYRYRYRYRYRYRYRY

NEWS OF AMATEUR RTTY

AUGUST 1965
30 Cents
Vol. 13, No. 8

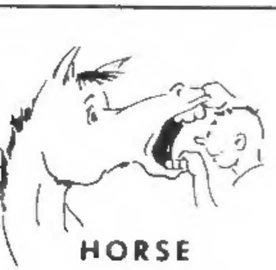

HORSE TRADES

This page of the Bulletin is for use of amateurs who have RTTY EQUIPMENT FOR SALE OR TRADE and those looking for equipment to buy or trade. It is a free service and may be the means of getting someone on the air.

RTTY, Inc.
372 WEST WARREN WAY
Arcadia, California
Return Postage Guaranteed

FOR SALE: Model 15, 14 typing reperf and TD. All like new and complete. Model 150 Kleinschmidt Printer complete, like new, $200.00. Want 28ASR or good ASR cabinet. K6PZT, 9337 Gotham Street, Downey, Calif. Phone TOpaz 9-3292.

FOR SALE: Model 26 Teletype for $55.00. W2JAV TU converter for $55.00 or $105.00 for both, with guarantee. WN2RNE, 381 North Forest Avenue, Rockville Centre, N. Y. 11570. Phone 516–766-7174.

FOR SALE: HT-32B, excellent condition, 1½ years old. $395.00. Phone 216–543-0638, K8MZS, 2225 Mt. Vernon Blvd., N. W. Canton, Ohio 44709.

FOR SALE: FM Schematic Digest, covering many of the Motorola FM units. $3.95 P.P. USA. Two Way Radio Engineers, Inc., 1100 Tremont Street, Boston 20, Mass.

WANTED: Complete Model 28 KSR with AC sync motor, keyboard and communications type. Will consider complete unit less cabinet; or – parts for Model 28 KSR keyboard and base, floor style cabinet, Automatic-Typer, etc. Send price and condx first letter. Pix if possible. K3AUD, Box 524, Republic, Penna. Phone 412–785-6329 between 7:00 and 11:00 P.M. (EDST).

FOR SALE: 255 A Relays, 3 for $4.00 P.P.; Sockets 3 for $1.25 P.P. KH6CI, 933 Owen Street, Honolulu, Hawaii 96819.

WANTED: Receiver in excellent condition of 51-J series. K8DRS, 1212 21st Street, N. W. Canton, Ohio 44709.

WANTED: Northern Radio TU, Type 150, give price in first letter. K8KAG, 470 Fallis Road, Columbus, Ohio 43214.

FOR SALE: Teletype Ribbons, 4 for $1.00. Minimum order of a dollar. Postage prepaid. W5INZ, 2105 Matthews Ave., N. W. Albuquerque, N. M.

FOR SALE: Various models of 28 Teletype. Write for price. 15, 14, and 19 set. Model 15 Auto-LF/CR kits, $17.50. 88 mhy toroids, 5 for $1.75 P.P. 44 mhy, 5 in can, uncased, $2.50 P.P. W6VPC, 1067 Mandana Blvd., Oakland, Calif. 94610.

WANTED: CH-62 wood chests for TG-7 Teletype typing units; will pay cash for either complete or incomplete chests; also require TG-7 base; less motor. Columbia Electronics, 4365 West Pico Blvd., Los Angeles 19, California.

RTTY RADIO TELETYPEWRITER TERMINAL UNIT

DUSTIN MORRIS, W7ITM
1035 Lemon, Space 9, Tempe, Arizona

The Cashion Electronics Company TU-6 is a simple, reliable, teleprinter terminal unit of the Two-tone type. It uses standard, inexpensive, readily available components such as the 2N706 silicon mesa transistor. It is unaffected by temperature extremes and has been tested from below 0° C. to above 100° C. There are no transistors in the audio circuitry, therefore, it has a very wide dynamic signal range. It is not intended to be the ultimate in terminal units, but is intended for both the beginner and advanced RTTY enthusiast. The TU-6 will copy wide shift or narrow shift signals at the flip of a switch, and has a mark hold circuit. It will copy from mark only or space only.

The mark and space filters are fed from the 4 ohm output of the receiver. For best results, about 200 milliwatts of signal are required, so if it is desired to monitor the signal with a speaker, a "L" pad should be used on the speaker as the level will be uncomfortable in the average room.

Assuming a constant input, the mark short time constant has a positive voltage 2E. The mark long time constant has a negative voltage E. The net result is an output of plus E for mark. When the mark is not present the output is minus E. When a space is present the space short time constant has a negative voltage 2E. The space long time constant has a positive voltage E. The net result is an output of minus E for space. When the space is not present the output is plus E.

When copying a normal signal the mark and space outputs are summed. The output will be plus 2E for mark (plus E from the mark short time constant and plus E from the space long time constant) and minus 2E for space (minus E from the space short time constant and minus E from the mark long time constant). If for any reason (selective fade, QRM, Etc.) we lose either mark or space tones, we will still have an output of plus or minus E. Thus, we can copy on either tone or both. If a steady signal such as CW is zero beat with one tone, the interrupted signal can be switched out of the circuit and copy will continue on the clear tone channel.

All transistors in the TU-6, with the exception of Q1, Q2, and Q3, are operated in digital logic circuits, that is, they are either on (conducting) or off (not conducting). Q1 and Q2 compose a differential amplifier. If ultimate performance is desired, these two transistors may be replaced by an integrated circuit type dual transistor, such as the Motorola MD1120 or MD1126.

The output of the summing network (junction of R21 and R22) is limited by D1 and D2, as we need only sense whether the signal at this point is positive or negative. This protects the emitter base junction of Q1 from excessive voltage. It is virtually impossible to damage the TU-6 by excessive audio input. In fact, the higher the input, the lower a fade can be tolerated. The only limitation on input is when the toroid inductor cores begin to saturate. Trimpot R19 sets the reference voltage on the base of Q2. The output of the differential amplifier will be the difference of the two base voltages. The output of Q2 is amplified by the driver, Q3. The output of Q3 drives the base of Q4. Q4 and Q5 compose a binary flip-flop. At any given time Q4 will be on and Q5 off, or Q5 will be on and Q4 off. The trimpot R19 is used to adjust the reference so that equal positive or negative signals at the base of Q1 will trip the flip-flop. This avoids bias distortion due to the fact that the output of the mark and space filters is not a square wave, but is more like a triangular wave. In fact, the easiest way to set this adjustment is to inject a small sine wave signal on the base of Q1 and adjust R19 for a square wave out of the flip-flop with equal on and off times.

Normal-reverse switching is accomplished by taking the output from the collector of Q4 or Q5. When the transistor is off, the signal is space and when the transistor is on the signal is mark. When the signal is mark, diode D3 will discharge C2 and C10. Transistor Q6 will be off. Diode D4 will hold transistor Q7 off, emitter-follower Q8 will have a high output, and Q9, the keyer transistor (a 2N3501 or similarly rated transistor) will be on. Current will now flow in the loop (normally 60 MA.). When the signal is space, transistor Q6 will be off, transistor Q7 will be on, and emitter-follower Q8 will have a low output. Transistor Q9 will be off, and no current will flow in the loop.

If the space signal exceeds about 250 milliseconds, C2 and C10, which have been charging through R14, will turn on Q6, Q7 will turn off, the emitter-follower output will be high, and Q9 will turn on, causing loop current to flow. The next mark signal will discharge C2 and C10 resetting the mark hold circuit.

The TU-6 requires plus 9 and minus 9 volts for operation. These voltages may be obtained from two simple shunt zener regulated power supplies. the loop voltage should not exceed 120 volts to avoid breakdown of the keying transistor.

Printed circuit boards and all components for this TU are available from Cashion Electronics Co., Box 7307, Phoenix, Arizona. Completed boards are available.

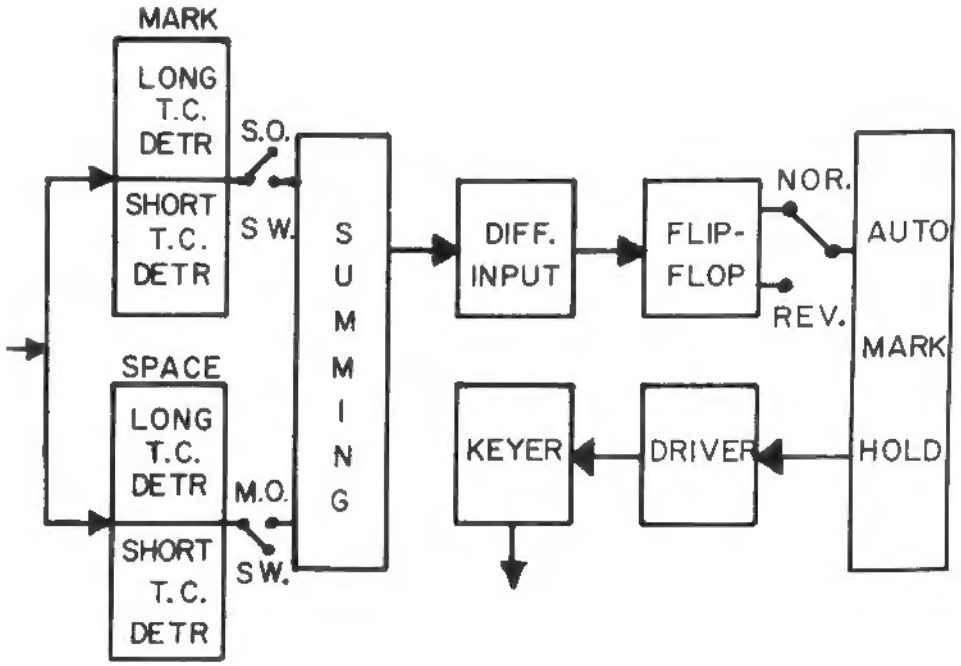

MARSHALL
DRIVE
SPEED

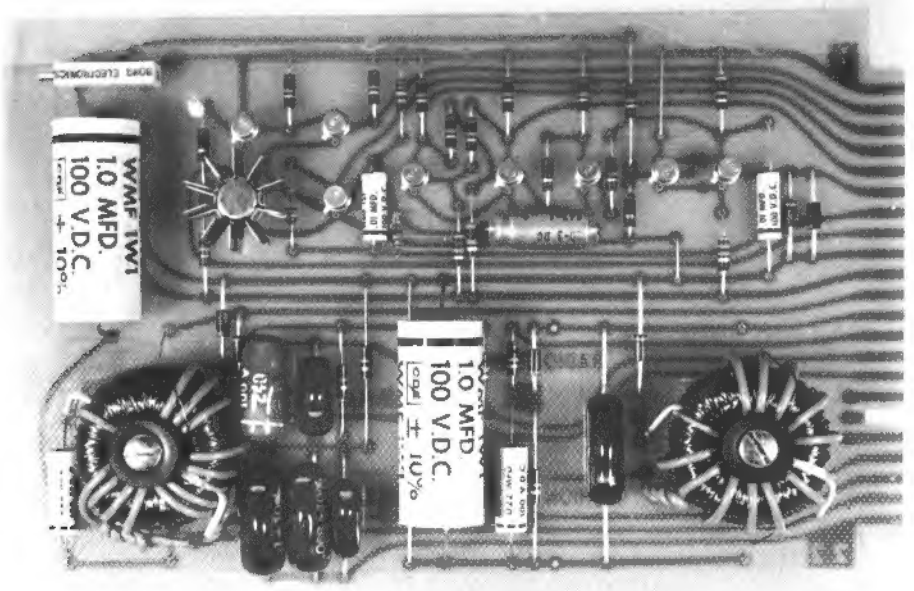
WMF TW1
1.0 MFD.
100 V.D.C.
± 10%
WMF TW1
1.0 MFD
100 V.D.C.
± 10%

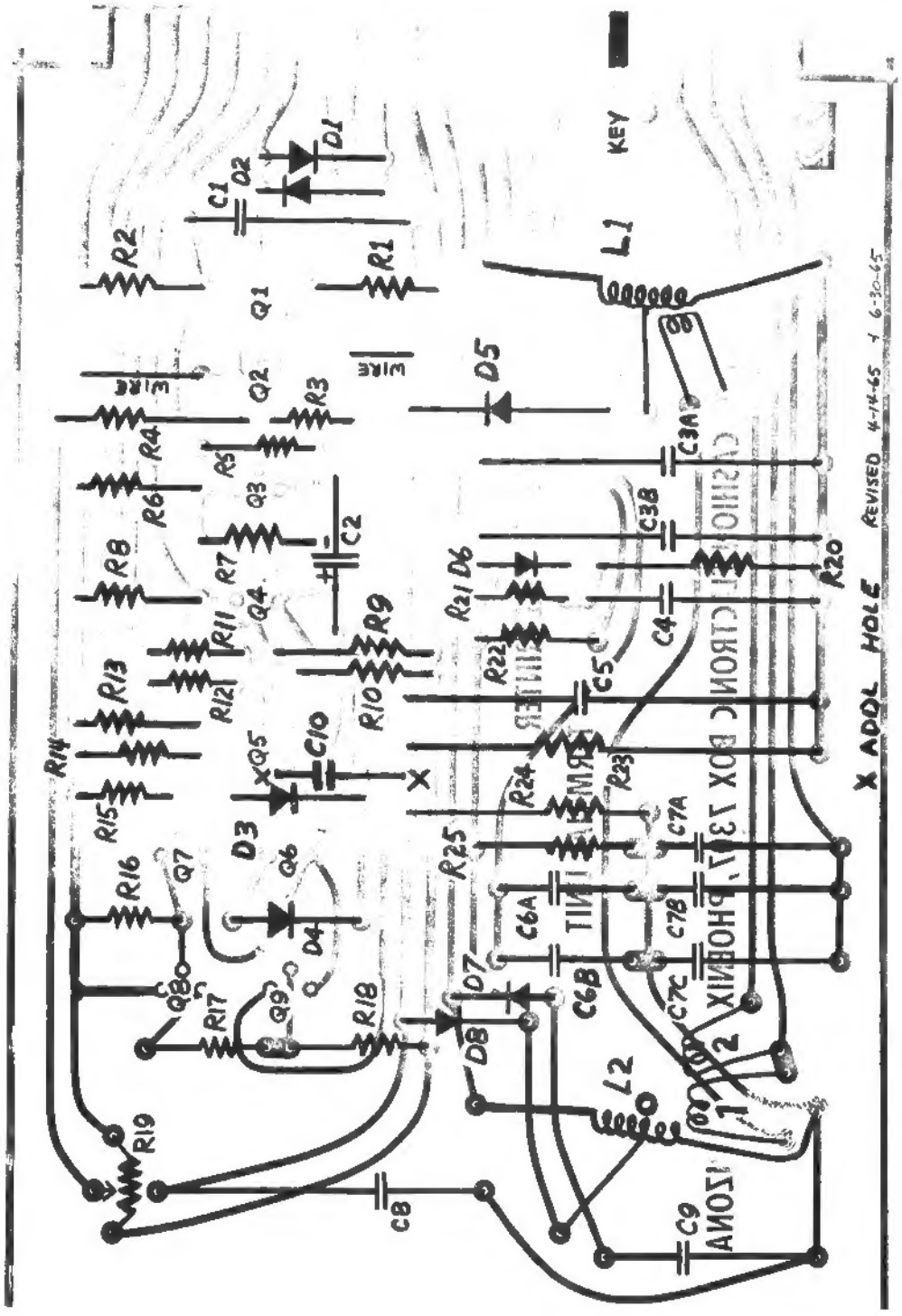
KEY
L1
L2
R1
R2
R3
R4
R5
R6
R7
R8
R9
R10
R11
R12
R13
R14
R15
R16
R17
R18
R19
R20
R21
R22
R23
R24
R25
C1
C2
C3A
C3B
C4
C5
C6A
C6B
C7A
C7B
C7C
C8
C9
C10
D1
D2
D3
D4
D5
D6
D7
D8
Q1
Q2
Q3
Q4
Q5
Q6
Q7
Q8
Q9
WIRE
WIRE
X ADDL HOLE
REVISED 4-14-65 + 6-30-65

MODIFYING THE COLLINS 32-S1 AND KWM-2 FOR RTTY

JOHN A. HUDICK W3ZJU — KR6BE

In this simple modification only 2 components are required, a 100K ½ watt resistor and a 50K linear potentiometer. Figure 1 shows the original unmodified circuit diagram of the 32S-1 and figure 4 shows the diagram of the KWM-2. Figures 2, 3, 5, and 6 show the modifications and their alternate modifications. Referring to figure 2, this shows the modification for FSK when in the CW position. The wire connecting the CW and USB switch terminals on wafer S-8H is removed and the 100K resistor connected in its place.

The potentiometer is mounted in a convenient location, accessibility is not important since adjustment is infrequent. One side of the potentiometer is connected to the CW terminal of S-8H and the wiper arm is connected to the "SPARE" jack at the rear of the chassis. The jack is then re-labeled "FSK". Shorting this jack to ground shifts the VFO frequency at an amount determined by the setting of the potentiometer. This jack should be connected to the keyboard contacts or the contacts of a polar relay, however, using the keyboard contacts to directly key the VFO results in an "upside down" shift. This explains my early transmissions from Okinawa. A special note: Under no circumstances should any external voltage be applied to this jack, the VFO does funny things when this is done. Simply short this terminal to ground to shift the frequency.

The modication is not harmful to the original operation of the exciter in the other modes and is very easy to remove. When the teleprinter is not used the operation will be normal. When the teleprinter is connected but not being used, the VFO frequency will be shifted slightly, (850 cycles) and all that will be necessary to do is to recalibrate by moving the hairline pointer.

Alternate modifications are shown in figures 3 and 6. The difference being that FSK will then be in the LOCK KEY position instead of CW. Modification procedure is nearly the same except that LOCK KEY should be substituted wherever SW appears. The disadvantage of using the alternate method is that the exciter must be manually switched from LOCK KEY to LSB when going from transmit to receive or vice-versa, and if CW identification is desired, it must be switched over to the CW position. Using the FSK modification in the CW position and installing a switch across the KEY jack enables the exciter to be operated BREAK-IN.

MODIFICATION of the KWM-2 is very similar to that of the 32S-1. This is shown in figures 4, 5, and 6. The steps are the same except the designation S-9B is substituted wherever S-8H appears. Also note that the positions of LOCK and TUNE on the KWM-2 is the reverse of the 32S-1.

Radioscience Laboratory
Stanford University
Stanford, Calif. 94305

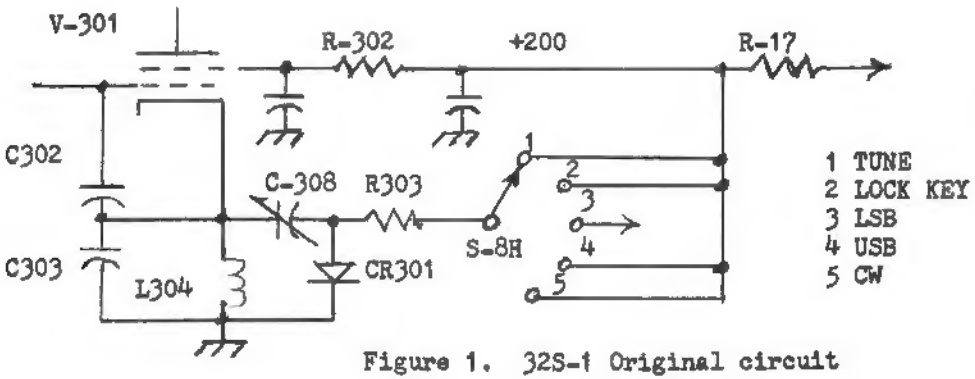

Figure 1. 32S-1 Original circuit

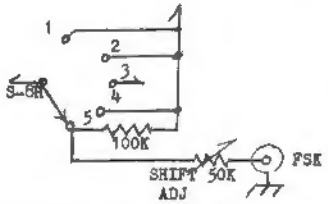

Figure 2. FSK in CW (32S-1)

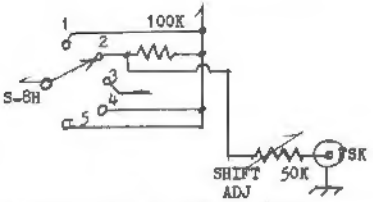

Figure 3. FSK in LOCK KEY (32S-1)

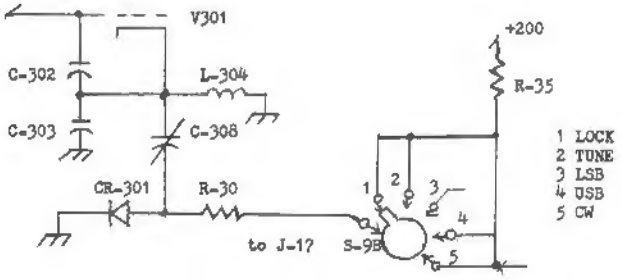

Figure 4. KWM-2 Original circuit

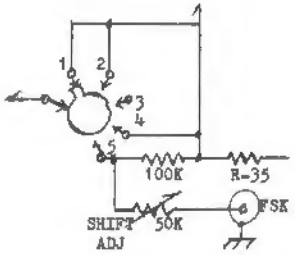

Figure 5. FSK in CW (KWM-2)

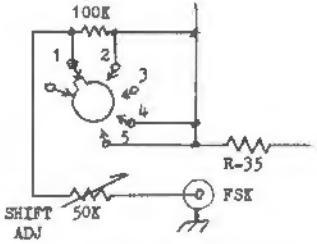

Figure 6. FSK in LOCK (KWM-2)

EMMISSION SWITCH WAFER LOCATION

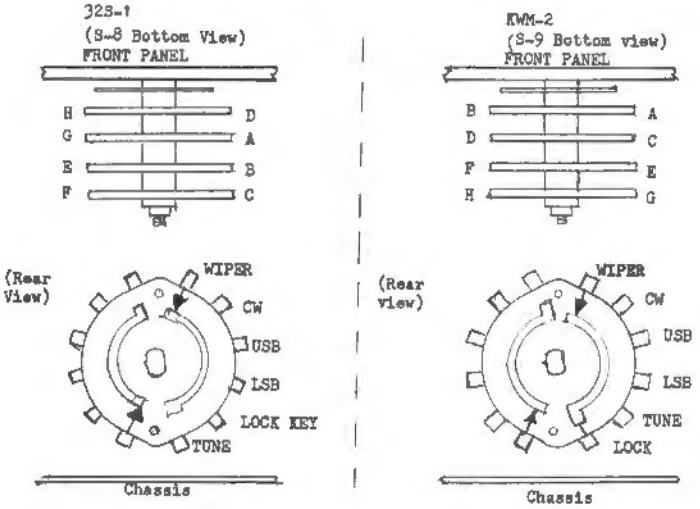

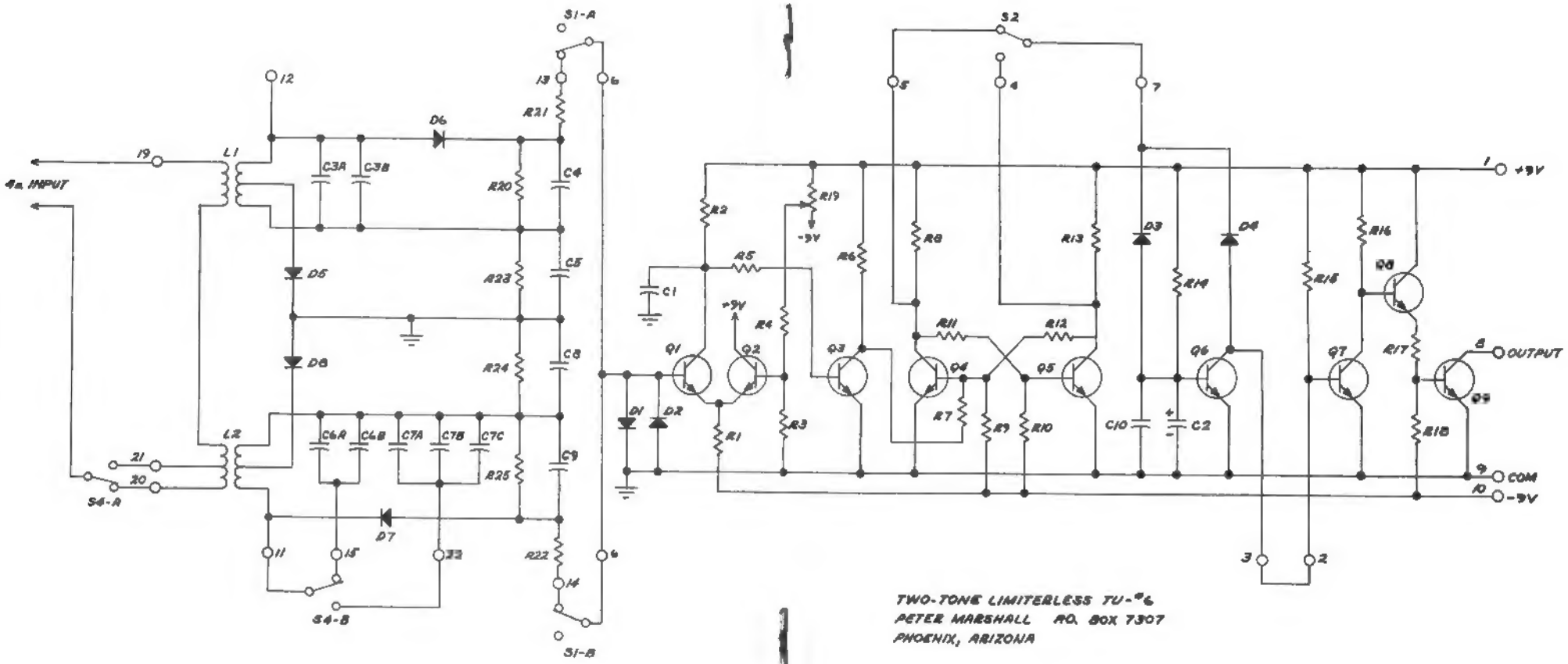
4a INPUT
S1-A
S1-B
S4-A
S4-B
S2
L1
L2
D1
D2
D3
D4
D5
D6
D7
D8
C1
C2
C3A
C3B
C4
C5
C6A
C6B
C7A
C7B
C7C
C8
C9
C10
R1
R2
R3
R4
R5
R6
R7
R8
R9
R10
R11
R12
R13
R14
R15
R16
R17
R18
R19
R20
R21
R22
R23
R24
R25
Q1
Q2
Q3
Q4
Q5
Q6
Q7
Q8
Q9
+9V
-9V
OUTPUT
COM
TWO-TONE LIMITERLESS TU-#6
PETER MARSHALL P.O. BOX 7307
PHOENIX, ARIZONA

K7VGW/MM DE W7ARS

Much has been written about traffic handling via amateur RTTY. RTTY, INC., wishes to add its congratulations to both of the above two Amateur RTTY stations. It is hard to believe that approximately 12,500 words of traffic were handled evenings between these two RTTY stations. Public notice was taken of this fine traffic handling at the National ARRL convention, held July 3, 4 and 5, 1965. The letter below and the plaque below it speak for themselves. Congratulations Allen, K7VGW/MM and Walt, W7ARS (ex-WØAJL).

U.S.S. PICKET (AGR-7)

Care of Fleet Post Office
San Francisco, California

28 June 1965

From: Commanding Officer
To: Mr. Walter Nettles
Subj: Letter of Appreciation

1. I take this opportunity to extend my appreciation and gratitude for the support and service you have provided the USS Picket.

2. The employment of Picket in the seaward extension of the contiguous radar barrier of the North American Air Defense Command has required the ship to remain at sea for approximately thirty day periods without access to normal mail channels. Since December, 1964 you have provided a means for the personnel aboard Picket to correspond with their families by the maintenance of a daily operating schedule between your amateur radio station W7ARS and the amateur radio facility aboard Picket. Letters from personnel on board were transmitted via teletype to you for mailing to their wives and parents and answering letters were mailed to you for relay to the ship.

3. The thing which most strongly affects the morale of Navymen away from home is the receipt of letters from their loved ones. By the unselfish donation of your time and energies you have contributed immeasurably to the morale of the Navymen aboard Picket.

4. May I convey to you the heartfelt thanks of all the officers and men of Picket.

C. W. Jones
Lieutenant Commander,
U.S. Navy
Commanding Officer

INSTRUCTIONS FOR THE INSTALLATION OF MILITARY MODIFICATION KIT TO PROVIDE AUTOMATICALLY RE-INKED NYLON RIBBON

TELEMETHODS INTERNATIONAL
3075 East 123rd Street, Cleveland, Ohio 44120

1) Replace existing right-hand ribbon spool container with special container supplied in kit.

Position so that ribbon guide roller on container is lined up opposite guide roller on left-hand spool container. Inkwell bearing bracket should now be parallel with printer platen, to the right of the type basket.

2) Snap inkwell into inkwell ball bearing.

3) Route special nylon ribbon supplied in kit as per drawing.

4) Grasping lower knurled edge of inkwell with one hand, unscrew inkwell cap.

5) Fill inkwell with ink to just below threads. Replace cap.

Notes on Operation of Kit

1) The ink supplied with these kits may have solidified. It may be restored by adding any standard ink solvent, or, stencil ink may be substituted. The ink used should have the consistency of light household oil.

2) Purpose of the separated upper and lower felt pads on inkwell is as follows: Only *lower* pad is supplied with ink.

Typing is done on *upper* half of ribbon. Upper half of ribbon receives ink from lower half by capillary action. Upper felt pad on inkwell absorbs any excess ink that may develop. This scheme prevents over-inking and assures perfect copy at all times.

3) Conical plastic tool is for installing new felt pads on inkwell.

4) Stainless steel tool is for freeing inkwell air hole or ink feed holes, if clogged.

5) Spare inkwell is provided, but generally not needed.

6) Inkwell should not require refilling oftener than every 24 hours of operation.

7) Nylon ribbon should last for life of machine.

Ed. note. These kits are available from the address listed above.

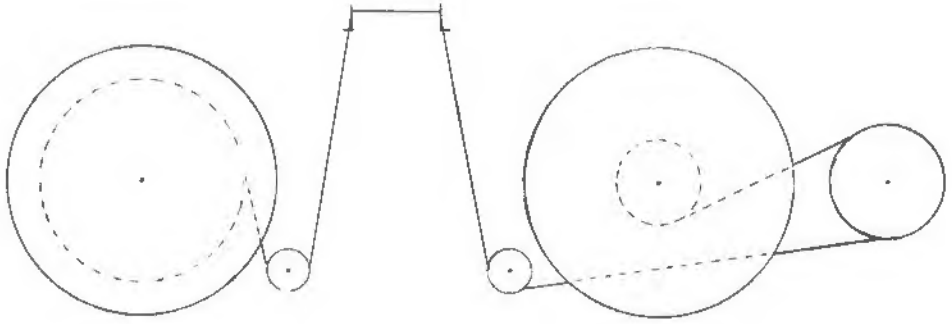

METHOD OF ROUTING RIBBON AFTER INSTALLATION OF MODIFICATION KIT

TELEMETHODS INTERNATIONAL
12 May 1965

NEWS

Mr. Merrill Swan, W6AEE
372 W. Warren Way
Arcadia, California
Dear Merrill:

A continuing problem to amateur radio is the presence of intruders in the amateur bands. Some of these are h.f. broadcasting stations, some are of the fixed service. In order to make an effort to get these stations removed, and in order to build up our ammunition for the next international allocations conference, we need interference reports from amateurs on these stations.

In the past we have resorted to general appeals in QST and in Communications Department bulletins, but these appeals have brought relatively little response. In recent months we have tried a direct appeal to various individuals who appear to be interested and to have the necessary skills, and our Intruder Watch is becoming fairly well organized.

In one area, however, we are weak, and that is the area of identification of some RTTY signals that appear in the amateur bands. It appears that we currently have no one who is technically capable of identifying what appear to be commercial radioteletype stations of various nationalities.

Much of this teletype activity takes place in the 14-Mc. band. Such signals have been spotted on 14,010, 14,055, 14,062, 14,073, 14,079, 14,105, 14,115, 14,165, 14,170, 14,180, and 14,200 kc.

I wonder whether you would inquire amongst your RTTY friends and see whether you can get a couple of them to volunteer for this Intruder Watch and help us with identification of some of these signals. If you can find a couple of such volunteers, I'll supply them with basic instructions, reporting forms, and my heart-felt thanks.

73.

Sincerely yours.
RICHARD L. BALDWIN, W1IKE
Assistant General Manager

RLB/jas

Broadcast number one eight priority from Headquarters Army Mars One Zero, May Six Five to all Army Mars members.

The steady increase in the use of radio teletypewriter in Mars nets is a definite indication that many radio amateurs still possess the desire to improve their technical knowledge and communications capability. The spirit of technical exploration is not confined to RATT enthusiasts. However, the radio amateur—Mars members who have mastered the electro-mechanical intricacies of a teletype machine, frequency shift keyer and converter—need not proclaim his technical accomplishments. His on the air RATT signals speak for him. While it is not Army Mars policy to promote any one mode to the exclusion of any other Chief Mars Army takes this opportunity to commend all RATT enthusiasts for their technical efforts and achievements.

HINTS ON TG-7B's

NORM, WA2JIS — NØRPA
1147 65th Street
Brooklyn, N. Y. 11219

Recently, a number of new Model TG7B's (military Model 15) and other machines, including reperforators, TD's, and other equipment, have been issued by Third District Navy MARS.

The statement that the machines are new is rather a misnomer. Actually, these are machines built about 1944, actually for the Army Air Corps. A common observance was that the machines did not work well at all when first put on. This is more reasonable when one realizes that they were in storage for a long time. In most instances they were only opened once (generally about 1960) and then only to check if they were still operative. Most machines make millions of mistakes when first put on. The way to cure this is quite simple — they must be thoroughly cleaned and oiled. Then, the machine must be run for about 6 or 7 hours before all the interconnecting parts begin to mesh the way they are supposed to. If, after 10 or 12 hours of typing, the machine still is making mistakes, check the manual for possible correction. A frequent condition is that the vanes on the front are frozen in either mark or space condition. In my case, the second vane was frozen, and I got a mark in the second interval, whether it was supposed to be there or not. A bit of degreasing and reoiled fixed this in no time and the machine now runs fine. Should this troubleshooting fail, the only thing left is to disassemble the machine, remove the roller and dunk the whole business in some sort of solvent (a tub works fine) and then put it all out to dry in the sun. If this doesn't work, the local Department of Sanitation is the only known cure . . .

By the way, got the machine running on the air. Unfortunately, the rig won't load on 80 meters, so I am restricted to 20, and you know how that is with low power. Still, it's fun trying. The kever works just fine, and the TU is terrific (CV89A) . . . with the change in its use, of which I wrote you before, can copy stuff down to the noise level. Great.

Will see you on the air one of these days, if I get time between schoolwork, editing the district bulletin (new job) and other assorted diversions. 73 and RYRYRYRYRYRY.

Will attempt to be on 20 every Sunday your time at 0300Z 14090 kc. Might put that in the magazine. Propagation is improving so maybe you can hear me now.

OK, OM. See on 20 and keep the keys going.

Arnold, KW6DS

NOTES ON SURPLUS BAND PASS FILTERS

In response to several inquiries from those who did not have the issue of RTTY which carried the connection to the filters, the following is given.

Both the 70 and 100 cycle "flat type filters" are 600 ohms in and output, with terminals 12 and 22 being input. Terminals 21 and 22 are output, with 18 being a shield and should be connected to common, terminal 22. This is for the Receiver filters. The transmit types of both band widths are: input 18 and 22; output 20 and 22, with shield 21 connected to 22.

The square cased filters with plugs on bottom, receiver type, 8 and 9 input, with 10 and 9 output. The transmit type, input 1 and 3, with 2 and 3 output.

Typical measurements on typical units are:

Large 70 cycle units

	—3DB	—6DB	—10DB	—40DB
1140	94	117	134	229
1500	93	116	134	234
2585	95	116	133	240

Small flat type 100 cps Receive

	—3DB	—6DB	—10DB
1105	132	160	191
1955	131	161	185
3145	128	161	186

Small flat type 100 cps Transmit

	—3DB	—6DB	—10DB
1105	130	160	183
2465	124	163	199
3145	124	163	203

Square type Receive 100 cps

	—3DB	—6DB	—10DB
2465	109	133	150

Square type Transmit

	—3DB	—6DB	—10DB
2465	149	176	201

Thanks to W6ZH for measurements.— Ed.

By the way, have a note of interest for you, on the CV89A. RMC Chris Walker, Director Third Navy MARS District, told me the best way to use the unit way to disregard the manual and do this instead:

1. Put the BFO at center.
2. Tune the signal in, so the mark and space are exactly separated.
3. Throw the normal/reverse switch one way or the other, and voila, print.

And, goll durn it, he's right . . . can now print stations I couldn't even hear before. Very nice.

73, Norm, WA2JIS

ITEM OF INTEREST

E. W. KOCH, W8QM1
2911 Dartmouth Drive
Midland, Michigan

For years I put up with having the printer copy disappear over the horizon, ending up on the floor behind the printer. As you know, this meant that I had visual access to about six or eight inches of copy. It dawned on me that a simple solution to the problem was to hook a pulley up on the ceiling above the printer, pass a cord through the pulley, fasten a paper clamp on one end and a suitable counterweight on the other. The paper clamp is snapped on the copy as it emerges from the printer, and the counterweight pulls it toward the ceiling. You can scan everything printed for the past fifteen or twenty minutes, and the jiggling up and down of the entire long page as the printer shifts from upper to lower case helps keep you more or less awake. When the copy reaches the pulley, tear the paper off at the printer, pull down the copy and the clamp, and start over. If there is a delay at this point, a sag develops, but no harm is done. The system has worked like a charm for several months now, and I thought you might want to pass it along.

RTTY has received copies of replies to FCC's Proposed Rule Making in Docket 15928, from WØRX and WØEBW. Also from W5VU. They have taken the time to express their views on this matter. If you feel strongly on this matter, why not take time to write the FCC outlining your thoughts. Both copies of letters were well thought and I feel they will be given consideration. How about you? Ed.

NOTICE—RENEWALS AND SUBSCRIPTIONS ACCEPTED THROUGH DECEMBER 1965 ONLY

Subscription Rate $3.00 Per Year
Via Air Mail or Overseas $4.00 Per Year

RTTY is the Official Publication of the

RTTY Society of Southern California
W6EV

and is published for the benefit of all RTTY Amateur and Experimenters

Copyrights reserved

For "RTTY" Information:
W6AEE, Editor W6CG, DX Editor

DX-RTTY

BUD SCHULTZ, W6CG
5226 N. Willmonte Avenue
Temple City, Calif. 91780

Hi DX'ers:

Here I am back at the same old stand once again and it sure will take a bit of doing to follow Ed Clammer and his DX reporting chore. I consider it a real privilege to have K3GIF handle the DX news for me when I take a respite. Thanks a meg, Ed, for a great job – your efforts were appreciated by all . . . and congrats on the TA1AH deal; I listened to both ends of that one and just sat here and drooled!

Let's start this month by saluting the latest members to achieve WAC on RTTY. Congratulations are in order for Olle – SM5KV, Freeman – KH6AX, Bob – WA6WGL, Jean – FG7XT and Matt – W6LDF. Business sure has been picking up in the WAC-RTTY department – nice work fellers!! Now let's get on with some of the mail piled up here on the desk. First off here's a letter from Sergio, I1LCJ, with news of the Volta DX Contest. Here's a few quotes – "The Volta contest seems to have done a good job but few logs are reaching the Contest Committee so have post-dated deadline. Also decided to deliver certificates to the two top winners in each U.S.A. call district." If some of you failed to send in your logs it's a bit late now as the deadline was postdated to July 10. Sergio points out that some of the scores were remarkable: for instance I1AHN collected 72,960 points! As I see it from Sergio's letter – the contest was a huge success except the lack of logs sent in for checking. It's the same problem we always have with the World-Wide RTTY SS Contest here also. It sure encourages the poor hard-working contest committee to receive a good percentage of logs after sweating out a contest. Take my word for it fellers – if you participate in a contest it will sure make some one happy if you'll just take the time to send in your score. So you didn't set the World on fire – send it in anyway and let 'em know you were in there pitching!

Martin, OY7ML, is on the keyboard quite regularly now and when conditions are decent he can be printed here on the West Coast. I enjoyed a QSO with SM6CSC and OY7ML about ten days ago in spite of heavy CW QRM. Martin writes that he has been printing many W stations but has had poor luck in raising them. Turn your beam in his direction and give him a try; OY7ML is a good catch for you DX'ers who are looking for a new country to add to your list. Ingemar, SM6CSC, has been coming thru like a local for several weekends. He writes that the following are now active in Sweden: SM5KV, SM6AEN, SM7AIA and SM5BMD.

Freeman, KH6AX, has taken time out from his DX activities to handle the communications for The Trans-Pacific Yacht Race from the Honolulu end of the course. He says that he and Walt, W7ARS, are keeping two skeds daily with McMurdo Sound in the Antarctic for handling Tfc and News.

Signals from the lads "down under" are once again coming through with landline copy. Eric, VK3KF, and Bruce, ZL1WB, are both regular "customers" every weekend with fine copy at both ends of the circuit. Eric tells me that he had an unfortunate experience when a stack of his QSL cards were burnt up. He is not certain if anyone who needed a QSL from him actually received one or not. Just in case there are some who need VK for a country or for WAC he has sent me an affidavit which includes every USA RTTY station worked by him and I will keep it as part of the WAC-RTTY file. Keep this in mind if you have been waiting for Eric's card to complete your WAC. Bruce, ZL1WB, has been working on a new TU when he hasn't been busy changing over some English TV sets to the N.Z. system. He gets on 14,095 several nights a week and stays around until about 0500.

Those of you who are not readers of the "The Short Wave Magazine" (British) missed a fine RTTY column this month by my old pal Bill Brennan, G3CQE. Bill's column "RTTY Topics" is replete with DX news, technical info, operating practices and good photos. This month he features a picture of Rex Howell's layout – WØRX. G3CQE discusses a few of the new ones who are turning up in Europe so without his permission I am going to pass 'em along here. Bill points out that MP4BEK was very active during the contest and had fine signals. OE2BSL provided many stations with a new country for their lists. Colin Jones, G3MWI, is credited with being the first station to work UB5AC and since this was probably the first two way RTTY operation from Russia it appears to be something of an historic event. Another new country raising the RTTY banner for the first time is GW3TSM. At the moment he is operational only on 80 but expects to be on the HF bands shortly. Bill also points out that another goodie for the country list is YS1RFE, who popped up out of a pile-up recently.

Before I forget it – the Fifth Annual World-Wide RTTY SS Contest will be held the weekend of October 16 and I might as well let it be known now that the rules will be the same as last year. However, with overseas activity picking up rapidly and more countries turning up every week, this will probably be the last year that a State Multiplier will be allowed. By 1966 we should be ready for an all DX contest with no credit for contacts in your own country. Get your gripes into me early – my QTH is at the top of the column!

In closing this mess up I have a little incident to relate to you sports car buffs. One day this past week, Gordon, HR1GM, stopped by the DX Desk to pick up a model 19 I wanted to dispose of. We made the deal in a few minutes and Gordon put the gear in his car and left fo rhome. What makes this a bit of unusual is the fact that Gordon was driving a VW and the model 19 consisted of the entire unit plus an extra power supply (Table, TD, keyboard, typing unit, plus two W.E. power supplies!). I should point out that none of the gear was tied to the outside of the car – it was all inside with the doors firmly closed – oh, yes – Gordon's number one son was comfortably seated alongside of him as they left. If any of you have a model 19 set and a VW you might try it some Saturday morning for kicks. If you don't have a VW or if you're not familiar with a model 19 just forget about the whole thing – sorry I brought it up.

See you here next month – 73

Bud, W6CG

HORSE TRADES

TRADE: Navy model OCT-3 (rack mounting) Frequency shift monitor, for model 28 (W/TD, etc.) or a good range model 19. Have several Northern Radio 152, Bohme Morse code keying heads. Also misc. gear. K4BUR, 9718 Braddock Road, Fairfax, Va. 22030.

WANTED: (Canadian) Collins 75A4 with filters, or other high grade receiver, either all bands or amateur bands. State all in first letter. VE3XF, 41 Kildonan Drive, Scarsborough, Ontario, Canada.

WANTED: (Canadian) Model 14 keyboard perforator with table and power supply. Table for model 15 printer. Collins 75A4 with 1.5 kc filter, VE3GK, 85 Fifeshire Road, Willowdale, Ontario, Canada.

FOR SALE: Teletype paper, 8½ canary, single or 2 copy carbon, new only, 90c per roll, or $8.00 case of 12. REC29/RA87 loop supply, 110 V DC at 400 ma. Good shape, $6.00. RCA Senior Voltohmyst VTVM 97A, excellent condx, $25.00. Navy FRA TU(IF), best offer. Write for big list of other bargains. W2DLT, 348R Essex St., Sterling, N. J. 07980.

WANTED: QST copies for January 1917 and August 1919. Will pay top dollar good copies. Need these for my collection. W2TAM, 140 Summit Ave., West Trenton, N. J. 08628.

FOR SALE: Model 15 page printer, good shape, $65.00. 2 TD units, 60 wpm, $40.00 each. Kleinschmidt TT-4A Page Printer, recently overhauled and used on the Ham Bands. $65.00. NO WAIVER required. K0ATZ, 2450 S. Quitman Street, Denver, Colorado 80219. Phone 303–934-1283.

WANTED: Technical Manual for TS-917A/GG. W7PQJ, P. O. Box 411, Lebanon, Oregon, 97355.

FOR SALE: Model 12 Teletype with W2PAT TU & polar relay, $30.00. One TT-63A Regenerative repeater, $30.00. W2-OAP, 40-33 61st Street, Woodside, N.Y. 11377.

FOR SALE: TD, $25.00. Parts at 25% discount for Teletype equipment. New 28 Technical manuals and 32 manuals at 25% discount. Teletype ribbons, 50c each. 11/16" perf tape, 75c roll. Mailing cost your responsibility. Repair is our main business. Write or call: Robert Tetrault, 12 Van Vliet Court, Clifton, N. J. 07013, Phone 201–773-5352.

FOR SALE: 15/32" oiled perf tape. Boehme. W6DOU, 3154 Stony Point Road, Santa Rosa, California.

TRADE: CV-89/URA-8 Teletype converter, less cabinet with all four sections mounted on a 11 x 17 x 2 homebrew chassis, with manual, need Wheatstone perforator for Morse Code. W5HPB. 4002 Levonshire, Houston, Texas 77025.

WANTED: (Canadian) Collins 709S-1 FS keyer. Cover for FRXD-10. 28 ASR complete. VE3-RH., Town House 106, 57 Waterford Drive, Weston, Ontario, Canada.

FOR SALE: Very limited quantities of the 100 cycle filters. 1445 T, 1615 T, 2805 T, 2975 R, 3145 R, 3315 R. These are the square cased approx. 3" x 3", with plug on bottom. 100 cycle flate case with 22 pin PC connector 420 T, 595 T, 765 T, 1105 T, 1445 R, 1615 R, 1785 T, 2465 T, 2805 R, 3145 R and T, 3315 T. All of the 70 cycle filters are sold. Similar to units used in the W6ZH TU. Orders filled as long as supply lasts, $2.50 plus postage. RTTY.INC., 372 Warren Way, Arcadia, California 91007. Also one Table Model 26,

FOR SALE: OPTION "A"–Fiberglass reinforced epoxy printed circuit board (G-10), with 2 oz. copper laminate, electrolysis tin plate, holes drilled, sized, with new transistor sockets, used edge connector, schematics, parts layout, parts list, postpaid in USA, $8.00. OPTION "B"–Phenolic (FR-200) printed circuit board, unplated, with new transistor sockets, used edge connector while they last, schematic, parts layout, parts list, postpaid in USA, $4.00. OPTION "C"–Completed wired glass epoxy board, tested, with all silicon transistors, output switching transistor installed, less power supply and switches, wide & narrow shift installed, (2975-2295-2125) standard shifts or (2125-1955-1275) "Collins" type shift, slight extra charge for shifts other than these with schematic, parts layout, parts list, postpaid in USA, $59.00. OPTION "D"–The same as Option "C" with the exception that the high voltage switching transistor is not included, $49.50. Cashion Electric, Box 7307, Phoenix, Arizona.